IH MENU STRUCTURE
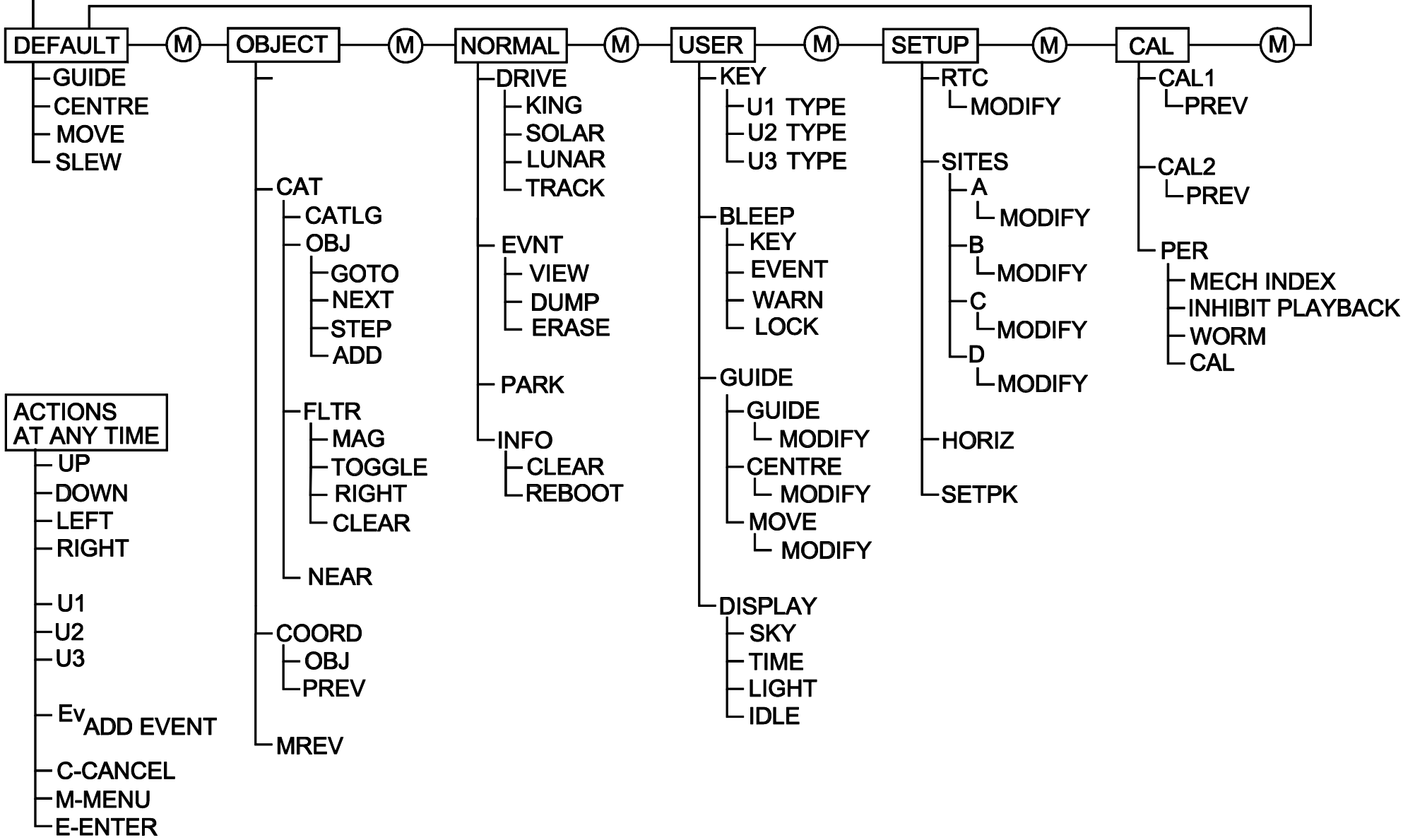
Version 1.6